May 26, 1937.

Memorandum:

Mr. Bailey.

With reference to the quotations on the Chlorinating Plant for the Cecilia Jeffrey Indian Residential School at Kenora, Ont. prices have been received from Wallace and Tierman, Ltd., and the Power and Mine Supply Co., Ltd., both of Winnipeg.

The Power & Mine Supply Co.'s price is $690.00

Wallace and Tierman Company's price is $779.00

Canadian Fairbanks Morse Company. No quotation.

In reference to these quotations the equipment as quoted on by Wallace and Tierman would be far superior and more satisfactory than the Power and Mine Company's equipment, and I would therefore recommend that the additional expenditure of $89.00 be made, and the equipment purchased from Wallace and Tierman Company, Ltd.

I might also state that it is noted that the price quoted covers supervision of installation by a Wallace and Tierman Engineer.

Director of Indian Affairs.

Indian Affairs. School Files.
(RG 10, Volume 6188, File 461-5, part 6)

PUBLIC ARCHIVES
ARCHIVES PUBLIQUES
CANADA

Library and Archives Canada / Bibliothèque et Archives Canada
www.collectionscanada.gc.ca

KODAK SAFETY FILM

Indian Affairs. School Files.
(RG 10, Volume 6188, File 461-5, part 6)

PUBLIC ARCHIVES
ARCHIVES PUBLIQUES
CANADA

CANADIAN PACIFIC TELEGRAPHS

129-3-5

C.D.EX

CLASS OF SERVICE	
Full Rate	
Day Letter	X
Night Message	
Night Letter	

Please mark an X opposite the class of service desired.

MONEY TRANSFERRED BY TELEGRAPH TO PRINCIPAL POINTS IN CANADA AND THE UNITED STATES

CABLE CONNECTIONS TO ALL PARTS OF THE WORLD
RADIOGRAMS TO SHIPS

TIME FILED

CHECK

W. D. NEIL, General Manager of Communications, Montreal

Send the following message, subject to the conditions on the back thereof, which are hereby agreed to.

Ottawa, May 29, 1937.

FRANK EDWARDS,
Indian Agent, KENORA, Ont.

DAY LETTER

EX'D.

REGARDING CHLORINATING PLANT CECILIA JEFFREY SCHOOL WIRE AT ONCE TO PATERSON ENGINEERING COMPANY TORONTO ADVISING IF PUMP SUCTIONS MANIFOLDED TO ONE COMMON SUCTION -stop- DO PUMPS OBTAIN SUPPLY FROM WELL BENEATH PUMPS OR FROM DISTANT SUPPLY -stop- DO PUMPS OPERATE SINGLY AND IF SO APPROXIMATELY HOW MANY HOURS DO THEY OPERATE -stop- WHAT IS PRESENT CHLORINE CONSUMPTION.

T. R. L. MacINNES

Chg. I. A. Br.
Mines & Resources

CANADIAN PACIFIC TELEGRAPHS

DIRECT CONNECTION WITH
POSTAL TELEGRAPH COMPANY
COMMERCIAL CABLES - - IMPERIAL CABLES

MONEY TRANSFERED BY TELEGRAPH

Gebels
N
A6805

C.D.
This is a full-rate Telegram or Cablegram unless otherwise indicated by signal in the check or in the address.

TELEGRAM		CABLEGRAM	
FULL RATE		FULL RATE	
DAY LETTER	DL	CODE	CDE
NIGHT LETTER	NL	DEFERRED	LG
NIGHT TELEGRAM	NM	NIGHT CABLE LETTER	NLT

W. D. NEIL, General Manager of Communications, Montreal.

STANDARD TIME

B29RASY 22 COLLECT.

KENORA,ONT.MAY 30-37. 1905A

SECY INDIAN AFFAIRS, 414

DEPT.MINES AND RESOURCES, OTTAWA.

REFERENCE TELEGRAM RE CHLORINATOR CECELIA JEFFRAY SCHOOL WIRED PATERSON ENGINEERING CO TORONTO TELEGRAPH COMPANY UNABLE LOCATE THEM PLEASE WIRE THEIR ADDRESS.

F.EDWARDS.

1225P

R

58 Pelham ave
Toronto

F. Van Schaster

Copied EB

Indian Affairs. School Files.
(RG 10, Volume 6188, File 461-5, part 6)

PUBLIC ARCHIVES
ARCHIVES PUBLIQUES
CANADA

Library and Archives Canada / Bibliothèque et Archives Canada
www.collectionscanada.gc.ca

12-36

CANADIAN PACIFIC TELEGRAPHS

C.D. 2.

CLASS OF SERVICE DESIRED	
Full Rate Telegram	
Day Letter	
Night Telegram	
Night Letter	

Please mark an X opposite the class of service desired; OTHERWISE THE MESSAGE WILL BE TRANSMITTED AS A FULL-RATE TELEGRAM

MONEY TRANSFERRED BY TELEGRAPH TO PRINCIPAL POINTS IN CANADA AND THE UNITED STATES

CANADIAN PACIFIC COMMUNICATIONS

CABLE CONNECTIONS TO ALL PARTS OF THE WORLD
RADIOGRAMS TO SHIPS

NO.	CASH OR CHG.
TIME FILED	
CHECK	

W. D. NEIL, General Manager of Communications, Montreal.

Send the following message, subject to the conditions on the back thereof, which are hereby agreed to. .....19.....

To:

Dely Toronto Ont. telegram

You have undeld telegram there favor Paterson Engineering Co. from Kenora Ont sgd. Edwards. Kenora reports it undelivered to Govt Official here stop The address is 58 Pelham Ave Toronto. Rush delivery new.

Ottawa Ont May 31

Sender's address or telephone number for reference.

Indian Affairs. School Files.
(RG 10, Volume 6188, File 461-5, part 6)

PUBLIC ARCHIVES
ARCHIVES PUBLIQUES
CANADA

Library and Archives Canada / Bibliothèque et Archives Canada
www.collectionscanada.gc.ca

129-3-2

CANADIAN PACIFIC TELEGRAPHS

C.P. 2

CLASS OF SERVICE DESIRED	
Full Rate Telegram	
Day Letter	
Night Telegram	
Night Letter	

Please mark an X opposite the class of service desired; OTHERWISE THE MESSAGE WILL BE TRANSMITTED AS A FULL-RATE TELEGRAM

MONEY TRANSFERRED BY TELEGRAPH TO PRINCIPAL POINTS IN CANADA AND THE UNITED STATES

CABLE CONNECTIONS TO ALL PARTS OF THE WORLD
RADIOGRAMS TO SHIPS

NO.	CASH OR CHG.
TIME FILED	
CHECK	

W. D. NEIL, General Manager of Communications, Montreal.

Send the following message, subject to the conditions on the back thereof, which are hereby agreed to.

19

To:

Ottawa Ont.

Ref yr 22 collect May 30 Dep Indian affairs sgd F Edwards. stop

Address fee- for that Paterson

Engineering Co Toronto is

58 Pelham ave. stop Advise Edwards

as well as Toronto.

Ottawa Ont May 33

Sender's address or telephone number for reference.

Indian Affairs. School Files.
(RG 10, Volume 6188, File 461-5, part 6)

PUBLIC ARCHIVES
ARCHIVES PUBLIQUES
CANADA

Library and Archives Canada / Bibliothèque et Archives Canada
www.collectionscanada.gc.ca

PATERSON CHLORONOMES

chosen by the City of Welland

FOR LOW MAINTENANCE

•

FINE WORKMANSHIP

•

DEPENDABILITY

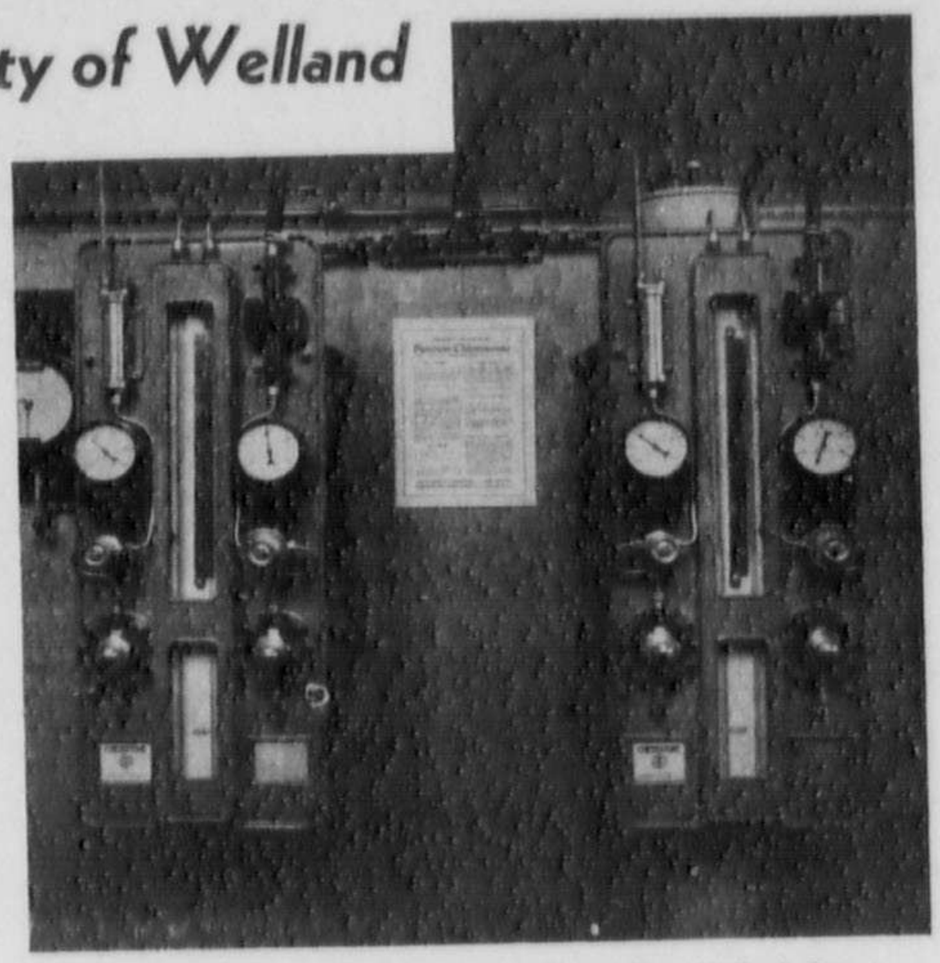

Installation of Paterson Chloronomes in Filtration Plant, Welland, Ont.

The City of Welland has had experience with various makes of Chlorination Equipment, but results were not satisfactory. Some time ago they installed a Paterson Chloronome, and were so extremely well pleased with results that they did not hesitate in ordering a duplicate machine.

The results at Welland simply bear out the experience which our parent English Company has had during the past seventeen years with installations all over the world. *In a side-by-side test, Paterson Chloronomes win the verdict.*

Because the design is correct—because the workmanship adheres strictly to the British ideal of 100% perfection—Paterson Chloronomes have always been recognized for their simplicity and absolute freedom from operating difficulties.

Made in Canada from parts of British and Canadian origin. Stocked and serviced from Toronto. Your inquiry is invited.

THE PATERSON ENGINEERING CO.
OF CANADA LIMITED

32 FRONT ST. W., TORONTO - WA. 6334 - JAY VAN BENSCHOTEN, Managing Director

Montreal: Municipal Supplies Ltd., 1192 University St.

Winnipeg: Walsh & Charles, 406 Tribune Bldg.

Indian Affairs. School Files.
(RG 10, Volume 6188, File 461-5, part 6)

PUBLIC ARCHIVES
ARCHIVES PUBLIQUES
CANADA

Library and Archives Canada / Bibliothèque et Archives Canada
www.collectionscanada.gc.ca

The Canada Starch Co. Limited.

WORKS
CARDINAL, ONT.
FORT WILLIAM, ONT.

RAILWAY EXCHANGE BUILDING
637 CRAIG STREET, WEST

ADDRESS ALL CORRESPONDENCE TO
POST OFFICE BOX 760
MONTREAL

Copy

Montreal, CANADA April 13th. 1932.

The Paterson Engineering Co. of Canada Limited,
32 Front Street, West,
Toronto, 2, Ontario.

Attention - Mr. J. Van Benschoten.

Dear Sirs:-

Your letter of the 24th. Ultimo duly received and has been handed to the writer for reply.

We have two Paterson chlorine machines at our Cardinal, Ontario, Plant, which were installed during the year 1920. These two machines were sold to us by Messrs. Laurie & Lamb and have given entire satisfaction since the time that they were installed. I note your remark that this is the only installation in the Dominion. On this point, however, I believe you are in error, as I understand several of these machines were sold in the West.

We have no hestitation, however, in saying that the machines give satisfaction and that the upkeep thereon is practically negligible. The writer does not remember of having spent anything whatsoever in the way of repairs. We have no objection to your using our name and citing our experience with reference to the satisfactory operation of the equipment.

Yours truly,

THE CANADA STARCH CO. LIMITED.

Jno H Brooker

JHH/FC.

Indian Affairs. School Files.
(RG 10, Volume 6188, File 461-5, part 6)

PUBLIC ARCHIVES
ARCHIVES PUBLIQUES
CANADA

Library and Archives Canada / Bibliothèque et Archives Canada
www.collectionscanada.gc.ca

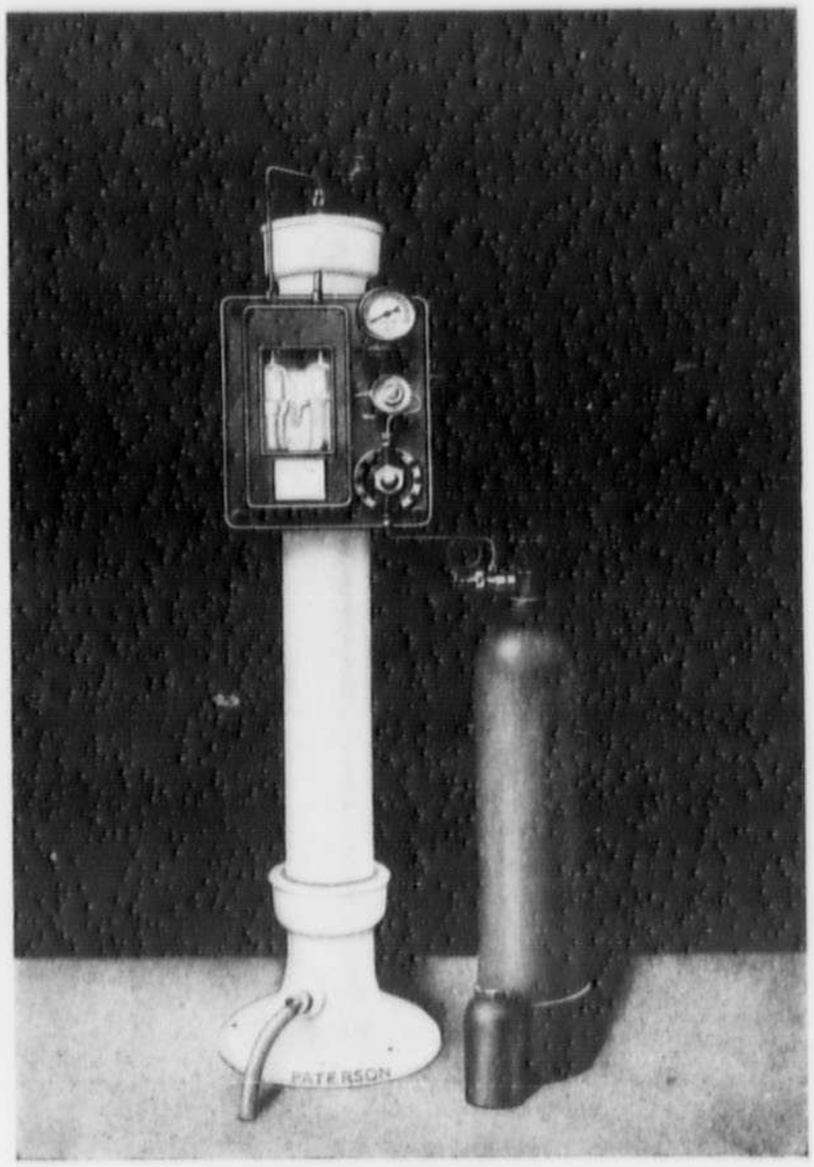

Paterson Chlorenome

B TYPE PULSER

THE PATERSON ENGINEERING CO. LTD.
WINDSOR HOUSE · KINGSWAY · LONDON

THE PATERSON ENGINEERING COMPANY OF CANADA LIMITED

P251
SB1M335

Indian Affairs. School Files.
(RG 10, Volume 6188, File 461-5, part 6)

PUBLIC ARCHIVES
ARCHIVES PUBLIQUES
CANADA

Library and Archives Canada / Bibliothèque et Archives Canada
www.collectionscanada.gc.ca

COPY FOR:

Phillip Phelan, Esq.,
Indian Affairs Branch,
Booth Building,
Ottawa, Ont.

T-1078 May Thirty-first, 1937

W. M. Bailey, Esq.,
Dept. of Mines & Resources,
Langevin Building,
Wellington Street,
Ottawa, Ontario.

CHLORINE CONTROL APPARATUS
CECELIA JEFFREY INDIAN SCHOOL

Dear Mr. Bailey:-

I was very pleased indeed to have had the pleasure of meeting you recently and discussing the subject job. As you will remember, I subsequently departed with Mr. Phelan but we were unfortunately unable to secure all information desired. We therefore dictated a letter to your local representative, Mr. Edwards, who has since replied direct to this office and we now have all desired facts.

Your layout at this school is exactly as the writer anticipated it would be, namely, your two pumps are manifolded to one pump suction, which in turn extends out into the lake some two hundred yards distant. The pumps are so arranged that they can operate singly or collectively. They function in periods approximating three minute intervals and their total operation daily is roughly three hours. It is also pointed out that one cylinder of chlorine lasts approximately one year and, of course, this is based on the past operation of your existing apparatus, which operates continuously, namely, 1440 minutes each day. It is of the type explained by the writer which introduces the chlorine solution into the pump suction when the pump is operating and by-passes to waste during period of shut-down. Therefore, on this same basis if you were actually treating the water only during the period of pump operation, this same cylinder of chlorine would last roughly eight years. In other words, with the existing layout you are wasting chlorine twenty-one hours out of each twenty-four.

We have quoted alternative proposals but very

Indian Affairs. School Files.
(MG 10, Volume 6188, File 461-5, part 6)

PUBLIC ARCHIVES
ARCHIVES PUBLIQUES
CANADA

Library and Archives Canada / Bibliothèque et Archives Canada
www.collectionscanada.gc.ca

strongly recommend your favourable consideration of our first quotation covering the Hypo-Chlorinator. This is the machine the writer endeavoured to explain to you orally, and which has been designed primarily for service of this type. With this arrangement you are applying chlorine solution only when the pump or pumps are in service, for when they are shut down the flow is closed off tightly. From the attached sheet you will appreciate the general appearance and method of operation of the apparatus. Its operation is definitely synchronized with your pumps and the control is obtained by means of the change in hydraulic conditions. In other words, when the pump is in service we take advantage of the suction or negative head existing on the suction side of the pump to pull the chlorine solution through at whatever rate has been pre-set. Conversely, when the pump shuts down we take advantage of the pressure building up on the suction side, which in turn holds back any further flow of chlorine solution. This is in essence the cycle which takes place continuously.

The writer does not believe it is necessary to amplify the remarks made in the attached bulletin. The sight feeder is the operator's means of increasing or decreasing the rate of flow of solution and of checking its flow by observation. The solution storage containers are all lined to withstand any corrosive action of the solution. There is a sight gauge glass arrangement on the storage container so that the operator knows at all times the level of chemical in storage, and of course can check the desired time to recharge the instrument.

The strength of the chlorine solution can be adjusted to suit and we generally recommend that the installation be so operated that it is only necessary to recharge the instrument every two or three weeks. This operation, by the way, is very simple and takes but a few moments, during which time the operation of the equipment is not altered.

We have included a slip-glazed, earthenware crock to facilitate mixing the sterilizing chemical. The latter is highly corrosive and a container made of either glass or as offered is necessary. This crock enables him to mix up a sizeable quantity which will take care of his requirements for months and it will be from this crock he will remove small quantities from time to time when charging the instrument proper.

You will also note that we have included in our proposal a 110 lb. drum of sterilizing chemical which will pro-

Indian Affairs. School Files.
(MG 10, Volume 6188, File 461-5, part 6)

PUBLIC ARCHIVES
ARCHIVES PUBLIQUES
CANADA

Library and Archives Canada / Bibliothèque et Archives Canada
www.collectionscanada.gc.ca

bably take care of your requirements, based on figures submitted covering previous operation, for the next two years. As pointed out above, we do not waste any chemicals, for the operation of the machine is synchronized with the pump and this enables you to effectively sterilize your supply with a much smaller quantity of chemicals annually.

In the past you have been using one cylinder, or 150 lbs. of gaseous chlorine annually and in wasting the chlorine 21 hours out of each 24 you are only actually requiring around 20 lbs. per year to effectively sterilize your supply. This 20 lbs. probably costs your Department from $2.00 to $2.50. It will be necessary to figure on 30 lbs. of the sterilizing chemical we have offered to give you the same quantity of actual chlorine, and the cost of this commodity will approximate some $7.00. In other words, if you were able to operate a gaseous type chlorinator, as we have outlined is the case with the Hypo-Chlorinator offered, your annual cost for chlorine would be around $2.00 to $2.50 as against around $6.00 or $7.00 with the powdered chemical. In your case, however, you are using roughly one cylinder of chlorine per year, wasting the commodity 21 hours out of each 24, so that your actual costs have probably been around $15.00 to $18.00 annually. You will therefore appreciate that the cost of the powdered chemical will be roughly half of the chemical costs you have been assuming in the past.

If you desire to obtain a simple, sturdy, and fool-proof instrument which can be satisfactorily operated by any person of average intelligence, we cannot too strongly recommend you to have this instrument installed. It has been primarily designed for the smaller supplies to work on pumps functioning automatically, and to be operated by people who would normally attend to the operation of pumping equipment along with a dozen and one other duties. We can give you no stronger recommendation covering the operation of this equipment than your Provincial Sanitary Engineer, Dr. A. E. Berry, located at Queens Park, Toronto.

For comparative purposes we have submitted a quotation on a standard gaseous type Chlorinator, designed to operate in a manner similar to your existing one but a machine from which you can expect better service. It is an instrument designed and constructed mostly by our parent company, The Paterson Engineering Company of London, England. It is a type which has been in service for over twenty years and they have installations world-wide, for they have always enjoyed a very fine export trade. Their equipment, as a matter of fact, is standard throughout the rest of the world and it has only been since the advent of this

Indian Affairs. School Files.
(RG 10, Volume 6188, File 461-5, part 6)

PUBLIC ARCHIVES
ARCHIVES PUBLIQUES
CANADA

Library and Archives Canada / Bibliothèque et Archives Canada
www.collectionscanada.gc.ca

company in 1932 that they have been offered for sale in the Dominion.

If by any chance you desire to requisition equipment for this job to handle gaseous chlorine, you will make no mistake in giving Paterson equipment serious consideration, but as above pointed out, the writer is definitely of the opinion that the simple Hypo-Chlorinator which we have endeavoured to describe rather in detail will handle your problem to the satisfaction of all concerned.

We are in a position to make reasonably prompt shipment and sincerely hope to have the pleasure of receiving your valued order.

Yours very truly,

J. Van Beneschoten
Manager

Enclosures.

Indian Affairs. School Files.
(RG 10, Volume 6188, File 461-5, part 6)

PUBLIC ARCHIVES
ARCHIVES PUBLIQUES
CANADA

Library and Archives Canada / Bibliothèque et Archives Canada
www.collectionscanada.gc.ca

THE PATERSON ENGINEERING COMPANY LTD., LONDON, ENGLAND
ENGINEERS AND CONTRACTORS FOR WATER PURIFICATION WORKS
TO THE ADMIRALTY · WAR OFFICE · AIR MINISTRY · CROWN AGENTS · INDIA OFFICE · ETC.

THE
PATERSON ENGINEERING COMPANY
OF CANADA, LIMITED

AFFILIATED WITH
UNITED STEEL CORPORATION, LTD.
58 PELHAM AVE.,
TORONTO

CHLORINATION — FILTRATION — SOFTENING

OFFICES
LONDON
BOMBAY
CALCUTTA

CABLES
CUMULATIVE
TORONTO
TELEPHONE
LLOYDBROOK 1126

5/31/37

Dear Mr Phelan:-

Am enclosing copy of proposal as promised. The layout is exactly the type I anticipated. Your local Engineer replied promptly and I have all information desired.

The Wilson Hypo-Chlorinator is an ideal unit for this job and will handle it without complication. Please note particularly that in my contract price I am including a complete year's supply of chemical, a special mixing crock - a testing set and supervision of installation.

Thanks for your kindness and advice & I am at further service.

Yours truly
Isaac Buschlen

Indian Affairs. School Files.
(RG 10, Volume 6188, File 461-5, part 6)

PUBLIC ARCHIVES
ARCHIVES PUBLIQUES
CANADA

Library and Archives Canada / Bibliothèque et Archives Canada
www.collectionscanada.gc.ca

189-3-5

II

EX'D.

June 3, 1937.

Memorandum:

Mr. Bailey.

Further to my memorandum of the 26th of May regarding the Chlorinator for the Cecilia Jeffrey Indian Residential School, at Kenora, Ont., the Hypo-Chlorinator unit as supplied by the Paterson Engineering Company of Toronto, as described in the attached specification appears satisfactory for use at the above mentioned school.

I might say that it is noted that the cost of this unit, including installation, is $658.00.

Acting Director of Indian Affairs.

Indian Affairs. School Files.
(RG 10, Volume 6188, File 461-5, part 6)

PUBLIC ARCHIVES
ARCHIVES PUBLIQUES
CANADA

Library and Archives Canada / Bibliothèque et Archives Canada
www.collectionscanada.gc.ca

SPECIFICATION AND TENDER

FOR

CHLORINATING APPARATUS

SCHOLA PUBLIC SCHOOL
KENORA, ONTARIO

We will furnish and superviso the installation of,-

1 only, Type CL-320-SP Wilson Hypo-Chlorinator, as illustrated and described on the attached sheet, complete with Ortho-Tolidine Testing Set, By-Pass arrangement, and all incidental fittings.

1 only, 25 gal. capacity special, slip-glazed, mixing crock with cover.

1 only, 110 lb. drum sterilizing chamical

All the above for the sum of..... $[illegible].00

DIRECTIONS

ALTERNATIVE

1 only, Solution Feed, Pulsar Type, Paterson Chlorinator, designed to dispense gaseous chlorine, for application of the chlorine solution to your vacuum pump suction, and arranged for semi-automatic application, namely, to apply chlorine solution to the pump suction when the pumps are in service and to allow it to by-pass when the pumps are shut down.

All the above for the sum of..... $[illegible].00

The above prices are F. O. B. Cars, Kenora, Ontario, include all taxes and supervision of installation.

Toronto, Ont., May 21st, 1937

Manufactured by

WILSON CONDIT AL ENGINEERS, INC. - - - - BUFFALO, N. Y.

Cat. Sec. 16-12

THE PATERSON ENGINEERING COMPANY OF CANADA LIMITED

Indian Affairs. School Files.
(RG 10, Volume 6188, File 461-5, part 6)

PUBLIC ARCHIVES
ARCHIVES PUBLIQUES
CANADA

Library and Archives Canada / Bibliothèque et Archives Canada
www.collectionscanada.gc.ca

No. 290

DIRECTIONS

THE PREPARATION OF HYPOCHLORITE FEEDING SOLUTIONS FOR WILSON HYPO-CHLORINATORS

We advise against the practice of putting dry hypochlorite powder directly into the hypo-chlorinator because this creates a sludge removal problem which, if not cared for regularly, will invariably cause clog-up troubles.

PREPARATION OF A SUPER-SOLUTION

Use a glass bottle or crock of suitable size which may range from 1 gallon to 30 gallons depending on the size of the Hypo-Chlorinator and the demand for chlorine. Prepare, according to this schedule, a super-solution and allow the same to stand over night until the sludge has settled to the bottom. To make this solution use water and high test hypo-chlorite powder in the following proportions:

Note: For practical reasons we have eliminated fractional pounds so far as possible and, therefore, this super-solution will be slightly over or under 10%, but this will make no difference if the same quantities are always used.

1	Gallon of water to	1½	lbs of	H T H Powder
2	" " " "	3	" "	" "
5	" " " "	7	" "	" "
10	" " " "	14	" "	" "
15	" " " "	20	" "	" "
20	" " " "	28	" "	" "
30	" " " "	40	" "	" "

To mix the above solution first put the prescribed quantity of water in the crock or bottle, then pour in the H T H powder and mix until dissolved.

FEEDING SOLUTIONS

Quantity of Super-Solution required to make feeding solutions, of the various concentrates, for use in Wilson Hypo-Chlorinators. Use water and super-solution in the various sizes of hypo-chlorinators and in the proportions set forth in the following table:

Type and Catalog No.	Gallons Gross Capacity	Gallons of Water for recharging		Gallons of 10% Super-Solution for: 1,250 ppm	2,500 ppm	5,000 ppm	10,000 ppm
JD 5	5 gallons	5 gallons	to	1/2 pint	1 pint	1 quart	2 quarts
JD 15	15 "	5 "	to	1/2 "	1 "	1 "	2 "
CL 30	30 "	20 "	to	1 quart	2 quarts	1 gallon	2 gallons
CL 50	50 "	30 "	to	1 " - 1 pint	3 "	1½ "	3 "
CL 100	100 "	60 "	to	3 quarts	1½ gallons	3 "	6 "
RL 60	60 "	40 "	to	2 "	1 "	2 "	4 "
RL 100	100 "	60 "	to	3 "	1½ "	3 "	6 "

TREATING CAPACITY OF THE VARIOUS FEEDING SOLUTION CONCENTRATES ON THE BASIS OF APPLICATION AT .5 ppm av. cl.

One gallon	1,250 ppm	feeding solution treats	2,500	gallons of water
" "	2,500 ppm	" " "	5,000	" " "
" "	5,000 ppm	" " "	10,000	" " "
" "	10,000 ppm	" " "	20,000	" " "

To determine the strength of feeding solution to use, consider the demand for chlorine and do not attempt to feed at a lesser rate than 60 drops per minute, as evidenced by the sight feeder. Use a solution that will not feed out so quickly as to require recharging too often. On the other hand the solution should not be kept in storage longer than 30 days.

WILSON CHEMICAL FEEDERS, INC. BUFFALO, NEW YORK U.S.A.

THE PATERSON ENGINEERING COMPANY OF CANADA LIMITED

Indian Affairs. School Files.
(RG 10, Volume 6188, File 461-5, part 6)

PUBLIC ARCHIVES
ARCHIVES PUBLIQUES
CANADA

Library and Archives Canada / Bibliothèque et Archives Canada
www.collectionscanada.gc.ca

WILSON CHLORINE TESTING SET

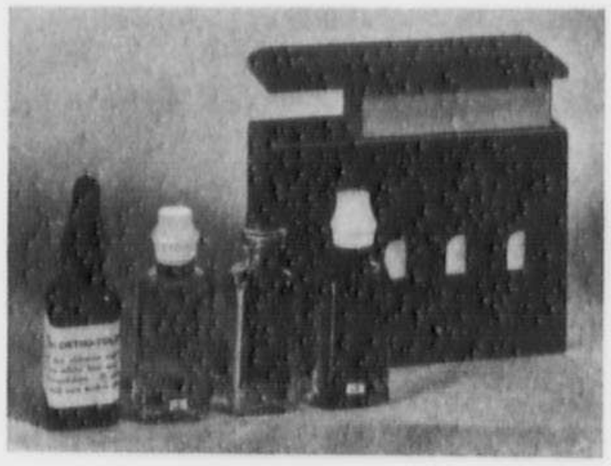

For Determining Small Amounts of Available Chlorine by the Orthotolidine Method

Manufactured by

WILSON CHEMICAL FEEDERS, Inc.

BUFFALO, N. Y.

Indian Affairs. School Files.
(RG 10, Volume 6188, File 461-5, part 6)

PUBLIC ARCHIVES
ARCHIVES PUBLIQUES
CANADA

Library and Archives Canada / Bibliothèque et Archives Canada
www.collectionscanada.gc.ca

TESTING FOR AVAILABLE CHLORINE BY THE ORTHOTOLIDINE METHOD

The efficiency of chlorine in destroying germ life is undisputed. Authorities everywhere recognize this but all agree that its application must be controlled.

The orthotolidine test is the simplest known method for determining the presence of small amounts of chlorine. The test is performed by taking a sample of the water to be tested, adding the color reagent—orthotolidine, and then comparing the color formed with the known standards. There are two limiting standards in the set. Other standards may be kept on hand.

The color formed varies directly with the amount of chlorine in the sample of water that is being tested.

The testing set or comparator herein described is very accurate and reliable and is designed for the practical needs of water supplies, swimming pools and sewage.

A Wilson Hypo-chlorinator is the most practical method of controlling the application of chlorine and one of these testing sets is furnished free with each Wilson Hypo-chlorinating system.

WILSON CHLORINE TESTING SET

This is a simple and compact pocket size four bottle set. The carrying case is 1¾" x 4½" x 5½", made of hard wood and very neatly finished.

The first bottle at left (see cut first page) contains one ounce of orthotolidine reagent. The second and fourth bottles contain the two limiting color standards, sealed and sterilized, with expiration dates affixed. Color standards are of approved type.

The third bottle is for the liquid to be tested.

Color is compared by looking through the three openings in the side of the case which registers with the bottles.

No. 102-A — For water supplies, limiting standards .1—.3 parts per million. Prepaid price	~~$4.25~~ 5.00
No. 102-B—For swimming pools—chlorine only, limiting standards .2—.5 parts per million. Prepaid price	~~4.25~~ 5.00
No. 102-C — For swimming pools — Ammonia and Chlorine limiting standards .3—.7 parts per million. Prepaid price	~~4.25~~ 5.00
No. 102-D—For Sewage — Limiting standards .5—1.0 parts per million. Prepaid price	~~4.25~~ 5.00
Color standards, each postpaid	.60
1-ounce Orthotolidine, postpaid	.50

Indian Affairs. School Files.
(RG 10, Volume 6188, File 461-5, part 6)

PUBLIC ARCHIVES
ARCHIVES PUBLIQUES
CANADA

Library and Archives Canada / Bibliothèque et Archives Canada
www.collectionscanada.gc.ca

WILSON HYPO-CHLORINATOR

TYPE JD

For Domestic and Small Institutional Water Supplies

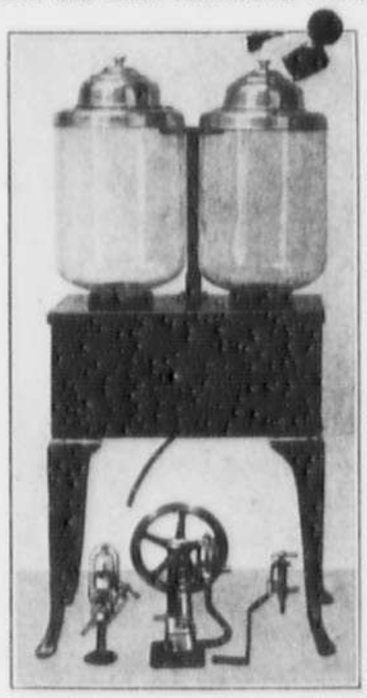

Illustrating the smallest of the four standard types of Wilson Hypo-chlorinators and chemical feeding systems.

Manufactured by

WILSON CHEMICAL FEEDERS, Inc.

BUFFALO, N. Y.

THE PATERSON ENGINEERING COMPANY OF CANADA LIMITED

Indian Affairs. School Files.
(RG 10, Volume 6188, File 461-5, part 6)

PUBLIC ARCHIVES
ARCHIVES PUBLIQUES
CANADA

Library and Archives Canada / Bibliothèque et Archives Canada
www.collectionscanada.gc.ca

Printed in U.S.A.

WILSON PROPORTIONING FEEDERS

TYPES SF, SE AND SJ WITH STYLE CL RE-AGENT TANK

FOR CHLORINE AMMONIA ALKALIS

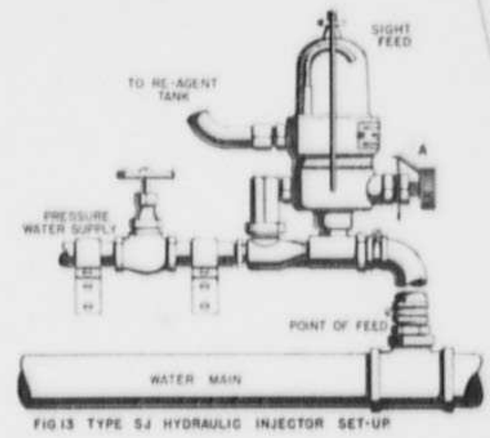

FIG. 13 TYPE SJ HYDRAULIC INJECTOR SET-UP

The above shows a typical set-up of a Type SJ Hydraulic Injector. Its chief application is in connection with swimming pools or jobs where the pressure in the main at the point of feed is considerably lower (approximately 15-lbs.) than the pressure of the water supply to the injector. This feeder is further described on the preceding page. In cases where favorable pressure differentials are available this is a reliable proportionate feeder of the manual control type. It is made to handle chlorine, ammonia and alkaline solutions. Prices of this feeder will be found in price list No. 36-B.

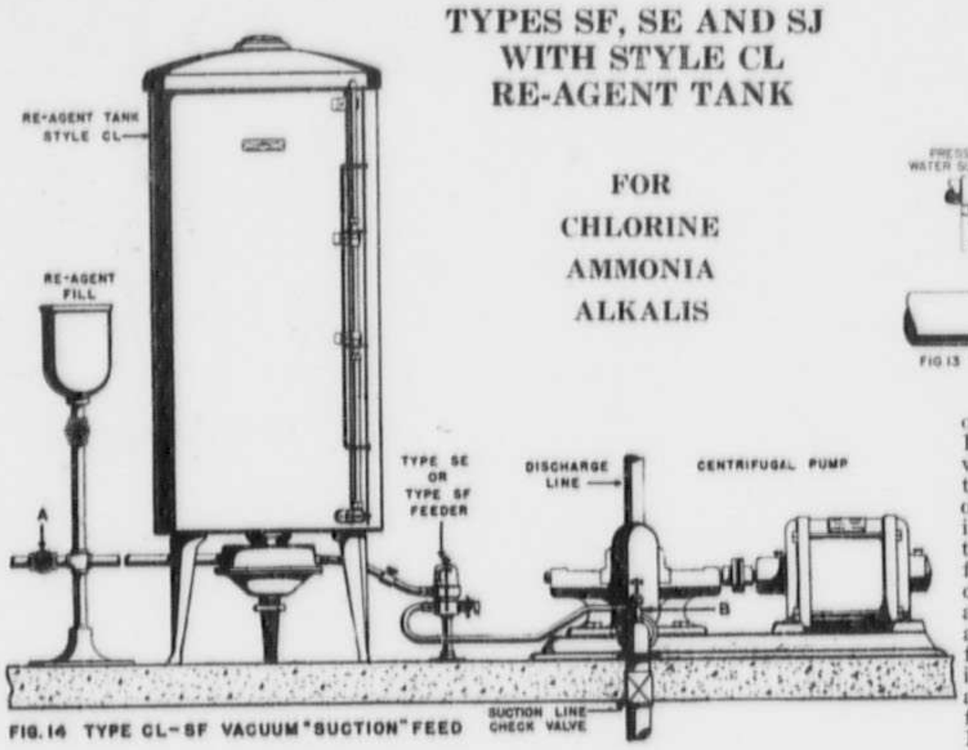

FIG. 14 TYPE CL-SF VACUUM "SUCTION" FEED

The above illustrates a Type SF Vacuum Feeder with Type CL re-agent tank feeding into the intake of a centrifugal type pumping plant. The point of application is shown at "B" and in the case of swimming pools the feeder tip furnished is known as Quick Clearing Feed Tip. An installation of a Style CL re-agent tank requires a connection with the water supply as shown at "A". The re-agent is put in through the funnel-like mixing tank, marked "Re-agent Fill. When two different chemicals are to be used, such as chlorine and ammonia, which is often the case with swimming pools, two separate complete installations are essential as it is not usually possible to combine two chemicals and feed through a single feeder. When ammonia is used with chlorine the ammonia re-agent tank may be one-half as large as that selected for chlorine. Capacity ratings and the sizes of jobs for which the various standard re-agent tanks are suitable, will be found elsewhere in our literature. Feeders are made in one size only as they are capable of such a wide range of adjustment that they may be used on any job from the smallest to the largest.

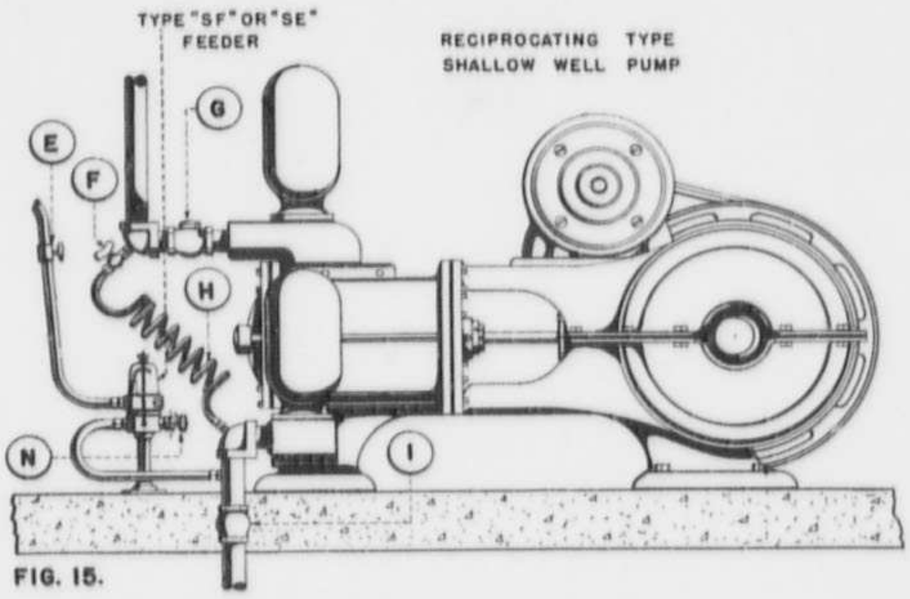

FIG. 15.

The above illustrates an installation of the Type SF and Type SE feeder in conjunction with a reciprocating pumping plant. Note the position of the By-pass "H-F" which is necessary, together with the Check Valves "I" and "G" shown in the suction and pressure lines. The Tubing "E" leads to the re-agent tank. These function in such a manner as to cause the automatic operation of the back check in the feeder element so as to automatically control the starting and stopping of the feeder in step with the operation of the pumping plant.

Manufactured by

WILSON CHEMICAL FEEDERS, INC. - - - - - BUFFALO, N. Y.

Cat. Sec. 36-12

THE PATERSON ENGINEERING COMPANY OF CANADA LIMITED

Indian Affairs. School Files.
(RG 10, Volume 6188, File 461-5, part 6)

PUBLIC ARCHIVES
ARCHIVES PUBLIQUES
CANADA

Library and Archives Canada / Bibliothèque et Archives Canada
www.collectionscanada.gc.ca

Vacuum and Injector Types Proportioning Feeders

TYPES SF, SE AND SJ WITH STYLE CL RE-AGENT TANKS

THE STYLE CL RE-AGENT TANK

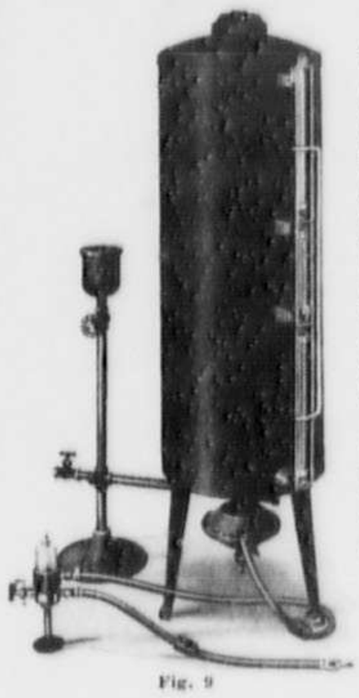

Fig. 9

The accompanying illustration shows the Style CL Re-agent Tank with a Type SF Vacuum (Suction) Feeder. This style tank is made in three standard sizes—30-gallons, 50-gallons and 100-gallons. The tank is equipped with a calibrating gauge with a sliding bar spacer which divides the total capacity of the tank in such a manner that one standard recharge of chemical concentrate will be used to two-thirds the total contents of the tank. The tank may be recharged whenever the liquid shows up on the lower gauge. Then the lower arm is placed at liquid level and water and the recharging chemical are caused to flow in until the feeding solution reaches the upper arm. This makes it possible to prepare repeated batches of feeding solution assuring a uniform chemical concentrate. This is very essential especially where accurate feeding is necessary. The re-agent tanks are of steel, lined by the Wilson patented Thermo-set process which is a cast plastic lining that is unaffected by hypochlorite, ammonia or other corrosive feeding solutions. They are beautifully finished in alkali and acid-proof dark green enamel. The fittings are chromium plated and all connections to the tank are of the bolted union type, rubber lined. This style of re-agent tank may be used with the following types of Feeders: SF, SE, SJ, DW, MD and DF. The three former are described in this circular.

TYPE SF VACUUM (SUCTION) FEEDER

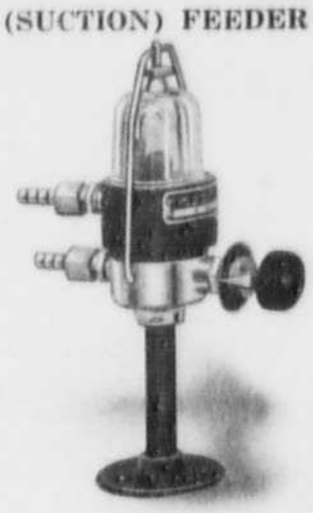

Fig. 10

Simplicity and freedom from working parts are features that commend the vacuum feeder. Conditions are suitable for its use wherever a vacuum or minus atmospheric pressure exists in the line into which it is desired to feed. This apparatus is particularly adapted for use in conjunction with shallow well pumps or in recirculated swimming pool pumps. When installed in accordance with instructions with the By-pass, later described and illustrated on the next page, it is positively automatic as to starting and stopping. That is, it functions in step with the starting and stopping of the pumping plant. Whenever this feeder is used it must receive its supply of feeding solution through a pressure or head regulator which is shown at the bottom of the Style CL re-agent tank. The feeder element, Figure 10, is a combination of a sight feeder which makes the rate of feed visible; a modulating or metering valve to manually control the rate of feed, and a sensitive back check which functions under hydraulic pressure to automatically control the opening and closing of the feed orifice with the starting and stopping of the pumping system. There is also furnished a By-pass which is an important adjunct to the Type SF feeder and is necessary in the case of recirculating shallow well pumps.

All feeders described in this circular are so constructed as to be positively unaffected by corrosive feeding solutions. Such materials as hard rubber, bakelite, glass and other non-corrosive metals and compounds are used.

TYPE SE VACUUM (SUCTION) FEEDER, SOLENOID CONTROL

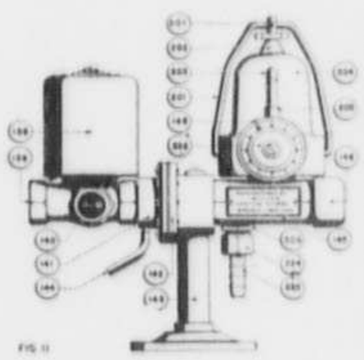

This feeder possesses all of the essential features of the Type SF except that the automatic starting and stopping is controlled by a Solenoid (electric control) Valve which is connected to the automatic control of the pumping plant so that the feeder opens and closes with the starting and stopping of the pumping plant. This feeder requires a connection with a ¼" or ⅜" water supply under pressure and there must also be provided a drain to dispose of the leakage dripping from the bleeder which relieves hydraulic pressure on the diaphragm controlling the shut-off. When this type is ordered the electric current characteristics should be mentioned, and an extra price over that shown in our regular price list is charged when other than 60 cycle current is used.

TYPE SJ HYDRAULIC INJECTOR TYPE

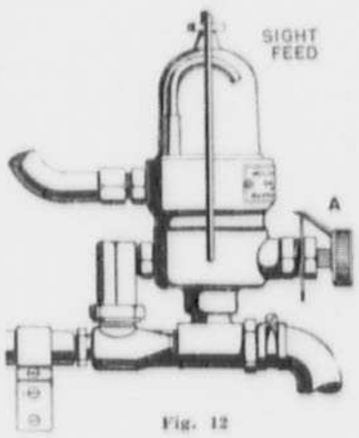

Fig. 12

With this type the displacement of the chemical re-agent is caused by a hydraulic syphon type injector which is capable under proper conditions of feeding against pressures, and is very reliable and accurate where the pressure to the injector is reasonably uniform. A description of the plan of setup will be found on the next page. In addition to the injector feature the element includes a sight feeder, a modulating valve and a sensitive back check which automatically stops the flow of re-agent when the water supply to the injector is closed off. Conditions favorable for the use of this type feeder may be said to exist wherever it is possible to have a pressure differential of 15 pounds between the point where re-agent is to be fed and the pressure in the line leading to the injector intake. This feeder is adapted to use on many swimming pool jobs where a city water supply is available to operate the injector.

Indian Affairs. School Files.
(RG 10, Volume 6188, File 461-5, part 6)

PUBLIC ARCHIVES
ARCHIVES PUBLIQUES
CANADA

Library and Archives Canada / Bibliothèque et Archives Canada
www.collectionscanada.gc.ca

129-3 #5

THE PATERSON ENGINEERING COMPANY LTD., LONDON, ENGLAND
ENGINEERS AND CONTRACTORS FOR WATER PURIFICATION WORKS
TO THE ADMIRALTY - WAR OFFICE - AIR MINISTRY - CROWN AGENTS - INDIA OFFICE - ETC.

THE
PATERSON ENGINEERING COMPANY
OF CANADA, LIMITED
AFFILIATED WITH
UNITED STEEL CORPORATION, LTD.
58 PELHAM AVE.,
TORONTO

CHLORINATION — FILTRATION — SOFTENING

OFFICES
LONDON
BOMBAY
CALCUTTA

CABLES
CUMULATIVE
TORONTO
TELEPHONE
LLOYDBROOK 1126

Our Ref: T-1078
Your Ref: 129-3-5

June Eighth, 1937

Department of Mines & Resources
Indian Affairs Branch.
JUN 10 1937
RECORDS

Department of Mines and Resources,
Indian Affairs Branch,
Ottawa.

Attention: R. A. Hoey, Esq.,
Sup't. of Welfare & Training

Subject: Cecilia Jeffrey Indian School.

Gentlemen:-

We are very pleased indeed to acknowledge your letter of the 5th accepting our offer of May 31st covering a complete Hypo-Chlorinator, with all incidental fittings, 25 gallon, slip-glazed crock, with cover, and Drum of sterilizing chemical.

We do not anticipate that there will be any delay in delivery and hope to get shipment away within the next ten days.

We are sending a copy of this letter to our Winnipeg representative, with a specific request to carefully explain its operation and maintenance to your local employees. He is frequently in Kenora and we are quite sure he will be glad to contact your institution and make sure that everything is functioning satisfactorily.

He will, of course, leave his address with the local representatives so that in case of any emergency, they can get hold of him at a moment's notice.

We appreciate this business indeed and sincerely hope to have the pleasure of receiving your future inquiries covering equipment of this type.

Yours very truly,

J. Van Benschoten m.

J. Van Benschoten

Indian Affairs. School Files.
(RG 10, Volume 6188, File 461-5, part 6)

PUBLIC ARCHIVES
ARCHIVES PUBLIQUES
CANADA

Library and Archives Canada / Bibliothèque et Archives Canada
www.collectionscanada.gc.ca

ADDRESS ONLY TO
THE PURCHASING DIVISION
WMB/GEA

CANADA
DEPARTMENT
OF
MINES AND RESOURCES
GENERAL ADMINISTRATIVE OFFICES

PLEASE QUOTE

FILE NO. .....

OTTAWA, June 4, 1937.

Memorandum:

Mr. W.J.F.Pratt.

On the 13th ultimo the Indian Affairs requested authority to have the Chlorination Plant at the Cecilia Jeffrey Indian Residential School, Kenora, replaced by a Wallace Tiernan, Winnipeg, at a cost of $780.00. I suggested that new tenders be called, which have now been received with the following results:-

Paterson Engineering Co.of Canada,Toronto...$658.00 X
Power & Mine Supply Company, Winnipeg..... 690.00
Wallace & Tiernan Company, Winnipeg..... 779.00
Canadian Fairbanks Morse Co., Winnipeg..... No quotation.

The Indian Affairs now recommend the acceptance of the tender submitted by the Patterson Engineering Company.

I may say that I have discussed their proposed plant with the City Waterworks Engineer, Mr.Macdonald, who strongly recommends it as being very satisfactory for schools, hospitals, etc.

The same is submitted for the Minister's approval.

APPROVED
Acting Minister.

Departmental Purchasing Agent.

Indian Affairs. School Files.
(RG 10, Volume 6188, File 461-5, part 6)

PUBLIC ARCHIVES
ARCHIVES PUBLIQUES
CANADA

Library and Archives Canada / Bibliothèque et Archives Canada
www.collectionscanada.gc.ca

129-3-5

ADDRESS REPLY TO
THE PURCHASING DIVISION
WMB/GEA

CANADA
DEPARTMENT
OF
MINES AND RESOURCES
GENERAL ADMINISTRATIVE OFFICES

PLEASE QUOTE
FILE NO. .....

EX'D.

OTTAWA, June 8, 1937.

Department of Mines & Resources
Indian Affairs Branch.
JUN 10 1937
RECORDS

Memorandum:

Mr.T.R.L.MacInnes.

Replying to your memorandum of the 3rd instant, I beg to advise you that approval has been given for the purchase and installation at the Cecilia Jeffrey Indian Residential School of the Hypo-Chlorinator unit as supplied by the Paterson Engineering Company of Toronto.

Wm Bailey
Departmental Purchasing Agent.

Indian Affairs. School Files.
(RG 10, Volume 6188, File 461-5, part 6)

PUBLIC ARCHIVES
ARCHIVES PUBLIQUES
CANADA

Library and Archives Canada / Bibliothèque et Archives Canada
www.collectionscanada.gc.ca

KODAK SAFETY ▲ FILM +●

129-3-5.

Ottawa, June 5, 1937.

Gentlemen:

This Department accepts your offer of May 31st, 1937, to install the following equipment at the Cecilia Jeffrey Indian Residential School, Kenora, Ont.:

1 only, Type CL-100-SF Wilson Hypo-Chlorinator, as illustrated and described on the attached sheet, complete with Ortho-Tolidine Testing Set, By-Pass arrangement, and all incidental fittings.

1 only, 25 gal. capacity special, slip-glazed, mixing Crock with cover.

1 " 110 lb. drum Sterilizing Chemical.

It is noted that the cost of the above, installed in the school, will be $658.00.

The Department would appreciate if you would proceed with the above installation at the earliest possible date. May I ask that, when your officer is installing this equipment, he give full directions regarding its operation to the school employee who will look after it.

If at any time during the next six months one of your officers is in the vicinity of Kenora, this Department would appreciate his visiting the school, in order to make certain that the equipment now being installed is receiving proper attention from the school management.

When the apparatus is installed, you should forward your account, in triplicate, to Mr. Frank Edwards, Indian Agent, Kenora, Ont., who will certify same and send to the Department for payment.

Yours truly,

R. A. Hoey,
Supt. of Welfare & Training.

The Paterson Engineering Co.
of Canada Limited,
58 Pelham Ave.,
Toronto, Ont.

Indian Affairs. School Files.
(RG 10, Volume 6188, File 461-5, part 6)

PUBLIC ARCHIVES
ARCHIVES PUBLIQUES
CANADA

Library and Archives Canada / Bibliothèque et Archives Canada
www.collectionscanada.gc.ca

129-3-5.

EX'D.

Ottawa, June 5th, 1937.

Dear Sir:

The Department has placed an order with the Paterson Engineering Company of Canada Limited, Toronto, Ont., for the installation of the following chlorinating apparatus at the Cecilia Jeffrey Indian Residential School:

1 only, Type CL-100-SF Wilson Hypo-Chlorinator, as illustrated and described on the attached sheet, complete with Ortho-Tolidine Testing Set, By-Pass arrangement, and all incidental fittings.

1 only, 25 gal. capacity special, slip glazed, mixing Crock with cover.

1 only, 110 lb. drum Sterilizing Chemical.

The total cost of the above equipment will be $658.00 and, when installed, the above Company will forward you their account, in triplicate, which you should certify and send to the Department for payment.

The officer of the Company who installs this apparatus is being requested to fully instruct the engineer at the school regarding its operation. The Department would appreciate your being present at that time, in order that you will be in a position in future to make certain that the school management is giving the equipment proper supervision.

Yours truly,

R. A. Hoey,
Supt. of Welfare & Training.

Frank Edwards, Esq.,
Indian Agent,
Kenora, Ont.

Indian Affairs. School Files.
(RG 10, Volume 6188, File 461-5, part 6)

PUBLIC ARCHIVES
ARCHIVES PUBLIQUES
CANADA

Library and Archives Canada / Bibliothèque et Archives Canada
www.collectionscanada.gc.ca

EXTRACT
ORIGINAL ON
75-129

129-3-5

Kenora, Ont., June 5th, 1937.

File

Dear Sir:

Inclosed please find Diary for the month of May.

The Chlorinator of the Cecilia Jeffrey Residential school broke down at the beginning of the month and it was found beyond repair. Dr. Ferguson instructed the Principal to boil all water being used at the school.

x x

Frank Edwards.
Indian Agent.

Indian Affairs. School Files.
(RG 10, Volume 6188, File 461-5, part 6)

PUBLIC ARCHIVES
ARCHIVES PUBLIQUES
CANADA

Indian Affairs Branch
JUN 18 1937
RECORDS

Library and Archives Canada / Bibliothèque et Archives Canada
www.collectionscanada.gc.ca

THE PATERSON ENGINEERING COMPANY LTD., LONDON, ENGLAND
ENGINEERS AND CONTRACTORS FOR WATER PURIFICATION WORKS
TO THE ADMIRALTY - WAR OFFICE - AIR MINISTRY - CROWN AGENTS - INDIA OFFICE - ETC.

THE
PATERSON ENGINEERING COMPANY
OF CANADA, LIMITED

AFFILIATED WITH
UNITED STEEL CORPORATION, LTD.
88 PELHAM AVE.,
TORONTO

OFFICES
LONDON
BOMBAY
CALCUTTA

CABLES
CUMULATIVE
TORONTO
TELEPHONE
LLOYDBROOK 1126

CHLORINATION — FILTRATION — SOFTENING

July 26, 1937.

Accounting Department,
Dept. of Indian Affairs,
Ottawa, Ontario.

Gentlemen:-

re CECELIA JEFFREY INDIAN SCHOOL
Kenora, Ontario

Would you be kind enough to send us a cheque covering our outstanding account for $658.00. A prompt remittance will be appreciated.

Yours truly,

J. Van Benschoten
Manager

Representative of the Treasury
RECEIVED
JUL 28 1937
INDIAN AFFAIRS.

Indian Affairs. School Files.
(RG 10, Volume 6188, File 461-5, part 6)

PUBLIC ARCHIVES
ARCHIVES PUBLIQUES
CANADA

Library and Archives Canada / Bibliothèque et Archives Canada
www.collectionscanada.gc.ca

129-3-5.

Ottawa, July 28th, 1937.

Gentlemen:

I have your letter of the 26th instant, with reference to your account of $658.00 for installing chlorinating apparatus at the Cecilia Jeffrey Indian Residential School.

In the last paragraph of official letter of June 5th you were requested to forward your account, in triplicate, to Mr. Frank Edwards, Indian Agent, Kenora. It is presumed that you did so, but we have not yet received the account from Mr. Edwards. Possibly this is due to the fact that Mr. Edwards is absent from his office a great deal during the summer on outside work. However, I am writing him today, requesting him to certify the account and forward it at once for payment. As soon as it arrives, cheque will be issued.

Yours truly,

R. A. Hoey,
Supt. of Welfare & Training.

The Paterson Engineering Co. of Canada Ltd.,
58 Pelham Ave.,
Toronto, Ont.

Indian Affairs. School Files.
(RG 10, Volume 6188, File 461-5, part 6)

PUBLIC ARCHIVES
ARCHIVES PUBLIQUES
CANADA

Library and Archives Canada / Bibliothèque et Archives Canada
www.collectionscanada.gc.ca

129-3-5.

EX'D.

Ottawa, July 28th, 1937.

Dear Sir:

In official letter of June 5th you were advised that the chlorinating apparatus would be installed at the Cecilia Jeffrey Indian Residential School by the Paterson Engineering Co. of Canada Ltd., Toronto, at a cost of $658.00.

I am today in receipt of a letter from the Company requesting payment of their account. As yet, this account has not reached us. Please certify and forward it to the Department immediately, provided that the apparatus has been installed according to instructions contained in official letter of June 5th and that it is working satisfactorily. If it is not in proper order, you should so advise me in order that the Company may be informed at once. Please give this matter your immediate attention,

Yours truly,

R. A. Hoey,
Supt. of Welfare & Training.

2 letters

Frank Edwards, Esq.,
Indian Agent,
Kenora, Ont.

Indian Affairs. School Files.
(RG 10, Volume 6188, File 461-5, part 6)

PUBLIC ARCHIVES
ARCHIVES PUBLIQUES
CANADA

Library and Archives Canada / Bibliothèque et Archives Canada
www.collectionscanada.gc.ca